5th AVENUE

4 SEATER

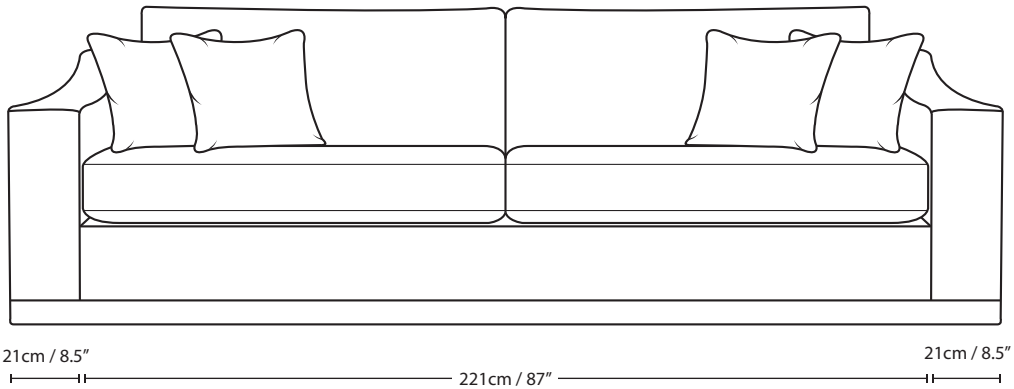

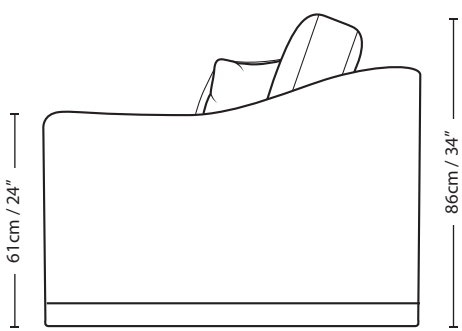

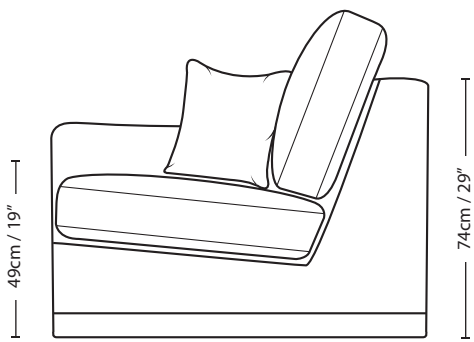

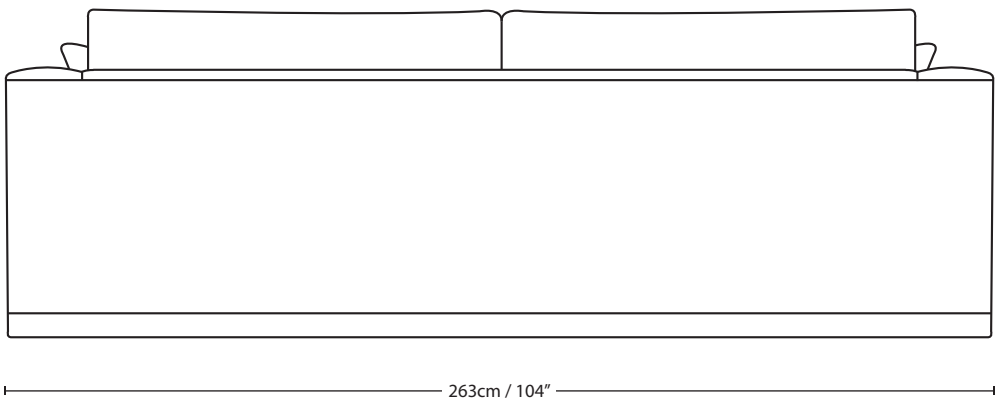

Overall Height 86cm / 34″	Overall Width 263cm / 104″	Overall Depth 104cm / 41″	Arm Height 61cm / 24″	Back Height of Frame 74cm / 29″	Seat Height 49cm / 19″	Arm Width 21cm / 8.5″	Inside Width Arm to Arm 193cm / 76″	Seat Depth to Cushions 63cm / 25″	Seat Depth no Cushions 79cm / 31″

Seating sizes vary to a great extent and particularly wherever there are soft cushions involved, this is magnified with front of seat to back cushion depths, whilst formal back cushions will vary with age and plumping. It is essential to note that scatter back cushion depths will adjust from which point you measure, overtime and with plumping, the accurate measurement does not exist as it will resize each and every time you enjoy its comfort.